*** Requires Dedicated Remote Blower and Ductwork***
Not included with purchase of Bio Cabinet

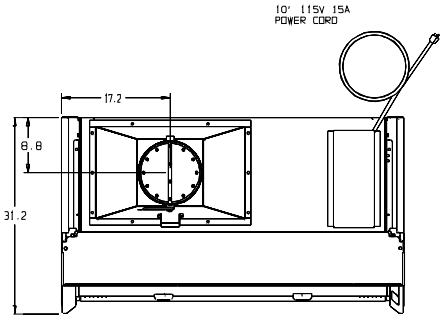

TOP VIEW

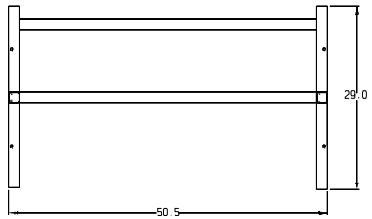

TOP VIEW

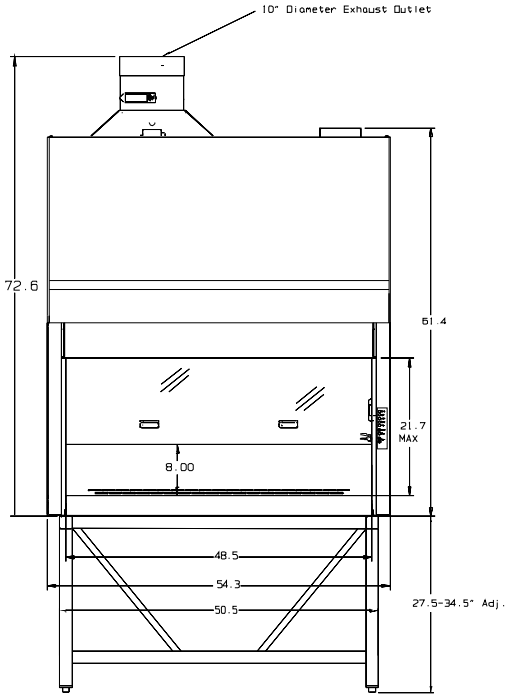

FRONT VIEW

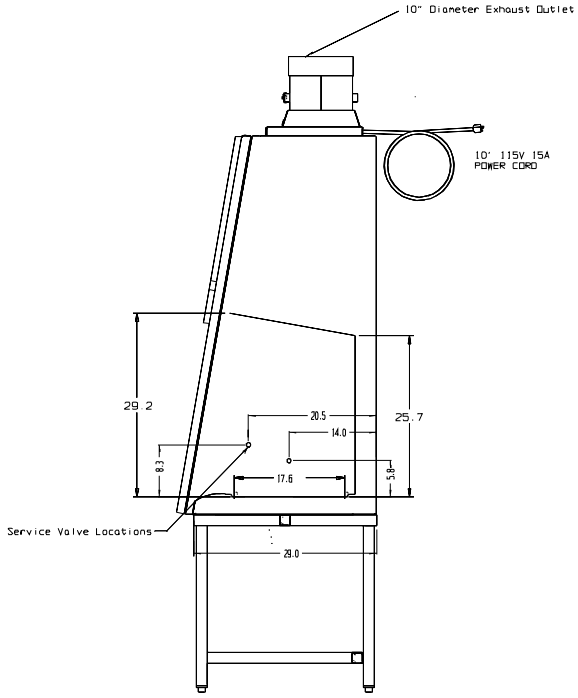

SIDE VIEW

SPECIFICATIONS

MODEL: 1310, 3111, 1315, 1316, 1317 and 1318
TYPE B2 BIOLOGICAL SAFETY CABINET - 4 FOOT WITH SLIDING WINDOW

INTERIOR: 16 & 18 GA. S.S. #4 FINISH

EXTERIOR: 16 & 18 GA. C.R.S.

PAINT: WHITE

BLOWER HOUSING: DIRECT DRIVE 10/8 REGULAR HOUSING

SUPPLY HEPA FILTER: NOMINALLY 18" X 48" X 3" AND RATED 99.99% AT 0.3 MICRONS EFFICIENCY

EXHAUST HEPA FILTER: NOMINALLY 18" X 26" X 6" AND RATED 99.99% AT 0.3 MICRONS EFFICIENCY

LAMPS: TWO (2) PART # F32 T-8 FLUORESCENT

BLOWER MOTOR: 1/2 H.P. 1625 R.P.M. 115 V. 50/60 HZ.

- ELECTRICAL -

MODEL: 1310 and 1311
MAIN UNIT POWER: 115 VAC. 1 PH. 300 W. 60 HZ. 4 AMPS

MODEL: 1315, 1316, 1317, 1318
MAIN UNIT POWER: 230 VAC. 1 PH. 300 W. 50/60 HZ. 2 AMPS

- AIR FLOWS -

IN-FLOW: 100-110 LFPM
DOWN-FLOW: 50-60 LFPM

CUSTOMER APPROVAL/REFERENCE
APPROVED BY _____
APPROVING FIRM _____
DATE OF APPROVAL _____

THIS DOCUMENT CONTAINS PROPRIETARY INFORMATION AND SUCH INFORMATION IS NOT TO BE DISCLOSED TO OTHERS FOR ANY PURPOSE NOR USED FOR MANUFACTURING PURPOSES WITHOUT WRITTEN PERMISSION FROM THERMO ELECTRON

ThermoFisher SCIENTIFIC
BOX 649, MARIETTA, OHIO 45750

REV	ECN NO.	DATE	BY	CAD	APPD	DESCRIPTION OF REVISION
0	N/A	06-10-08	CCS	CCS		RELEASED FOR PRODUCTION

DATE 06-06-08	DWN CCS	CAD CCS	APPD	SCALE 5/32	
CUSTOMER					
JOB TITLE	1300 SERIES B2 4 FT BIOLOGICAL SAFETY CABINET				
DWG TITLE	ASSEMBLY				
LOCATION HOODS	JOB NUMBER	DRAWING NUMBER 1310-00-0-D			