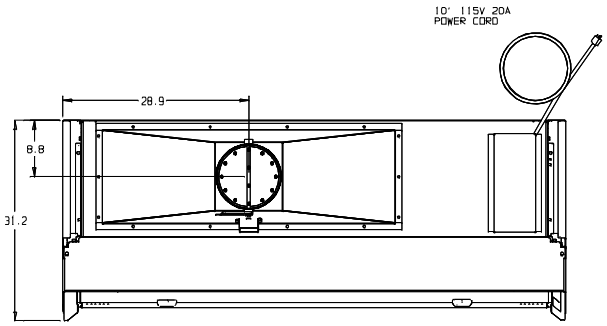

TOP VIEW

*** Requires Dedicated Remote Blower and Ductwork***
Not included with purchase of Bio Cabinet

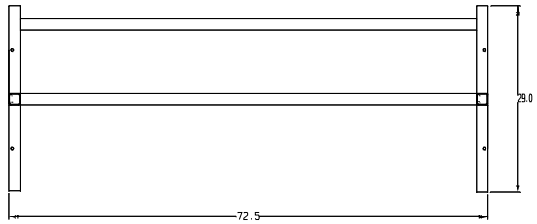

TOP VIEW

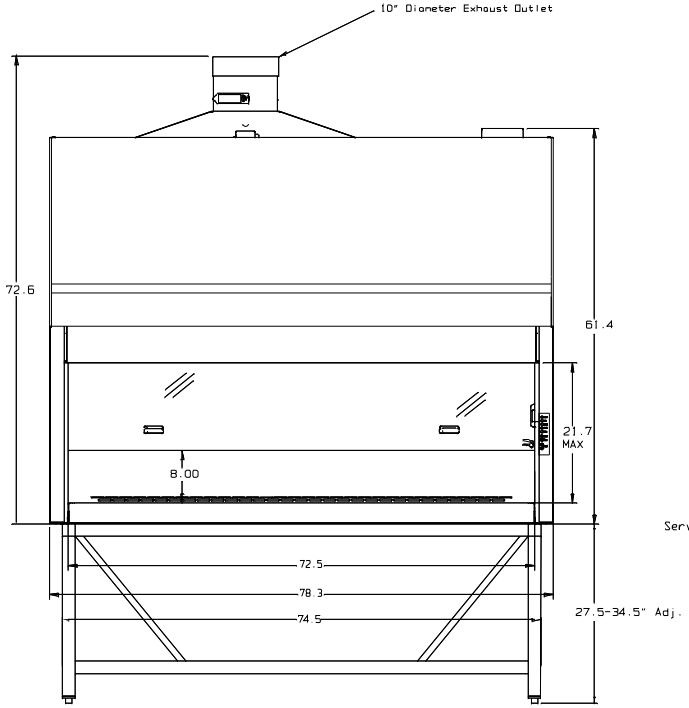

FRONT VIEW

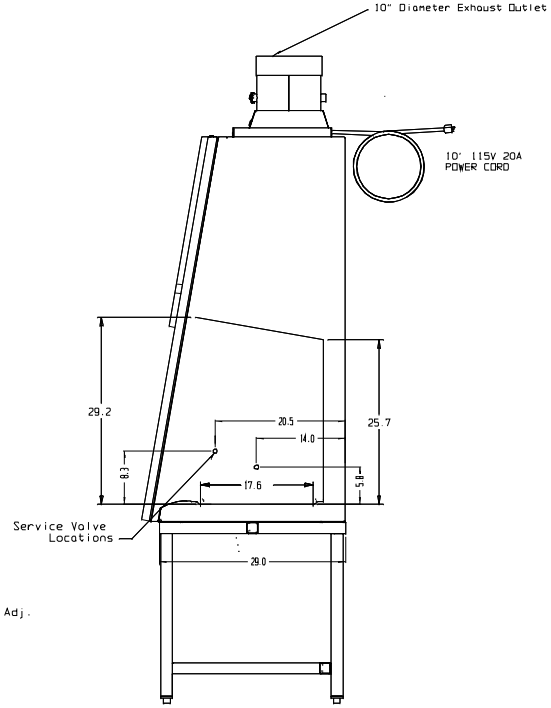

SIDE VIEW

SPECIFICATIONS

MODEL: 1360, 1361, 1362, 1363, 1364, 1365
TYPE B2 BIOLOGICAL SAFETY CABINET - 6 FOOT WITH SLIDING WINDOW

INTERIOR: 16 & 18 GA. S.S. #4 FINISH

EXTERIOR: 16 & 18 GA. C.R.S.

PAINT: WHITE

BLOWER HOUSING: DIRECT DRIVE 10/8 REGULAR HOUSING

SUPPLY HEPA FILTER: NOMINALLY 18" X 72" X 3.06" AND RATED 99.99% AT 0.3 MICRONS EFFICIENCY

EXHAUST HEPA FILTER: NOMINALLY 18" X 24" X 6" AND RATED 99.99% AT 0.3 MICRONS EFFICIENCY

LAMPS: TWO (2) PART # F32 T-8 FLUORESCENT

BLOWER MOTOR: 1/2 H.P. 1625 R.P.M. 115 V. 50/60 HZ.

- ELECTRICAL -

MODEL 1360, 1361
MAIN UNIT POWER: 115 VAC. 1 PH. 500 W. 60 HZ. 8 AMPS

MODEL: 1362, 1363, 1364, 1365
MAIN UNIT POWER: 230 VAC. 1 PH. 500 W. 50/60 HZ. 4 AMPS

- AIR FLOWS -

IN-FLOW: 100-110 LFPM
DOWN-FLOW: 50-60 LFPM

CUSTOMER APPROVAL/REFERENCE
APPROVED BY
APPROVING FIRM
DATE OF APPROVAL

THIS DOCUMENT CONTAINS PROPRIETARY INFORMATION AND SUCH INFORMATION IS NOT TO BE DISCLOSED TO OTHERS FOR ANY PURPOSE NOR USED FOR MANUFACTURING PURPOSES WITHOUT WRITTEN PERMISSION FROM THERMO ELECTRON

Thermo Fisher SCIENTIFIC
BOX 649, MARIETTA, OHIO 45750

REV	ECN NO.	DATE	BY	CAD	APPD	DESCRIPTION OF REVISION
0		06-10-08	CCS	CCS		RELEASED FOR PRODUCTION

DATE 06-06-08	DWN CCS	CAD CCS	APPD	SCALE 5/32	
CUSTOMER					
JOB TITLE	1360 BENCH TOP 6FT LAM FLOW BIO SAFETY CABINET				
DWG TITLE	ASSEMBLY				
LOCATION HOODS	JOB NUMBER	DRAWING NUMBER 1360-00-0-D			